Products with diode inside ⚠ are discontinued in 2014.

If you are seeking a CA relay type not listed in this current data sheet, please refer to the one under the rubric "Discontinued / Not for new applications".

Panasonic
ideas for life

Automotive power relays - small size, light weight

CA RELAYS

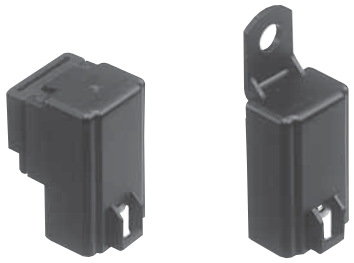

⚠ Products to be discontinued.

FEATURES

1. Small size and light weight
For space saving, the outside dimensions of the main body are reduced to be 21.5 mm (length) × 14.4 mm (width) × 37 mm (height) (.846 × .567 × 1.457 inch) and the weight is also reduced to be approx. 19 g .67 oz (direct coupling 1 Form A, 1 Form B type)

2. Low operating power (1.4W) type is available (1 Form A, 1 Form B)

3. Since the terminal arrangement complies with JIS D5011 B4-M1, commercial connectors are available for these types of relays.

SPECIFICATIONS

Contact

Type			12 V DC			24 V DC
Arrangement			1 Form A	1 Form B	1 Form C	1 Form C
Initial contact resistance (By voltage drop 6 V DC 1A)			Max. 50 mΩ			
Contact material			$AgSnO_2$ type			
Contact voltage drop			Max. 0.3 V After electrical life test, by voltage drop 12 V DC 20 A (1.4 W type), 12 V DC 30 A (1.8 W type)	Max. 0.3 V After electrical life test, by voltage drop 12 V DC 20 A	Max. 0.4 V After electrical life test, by voltage drop 12 V DC 20 A	Max. 0.4 V After electrical life test, by voltage drop 24 V DC 10 A
Rating	Nominal switching capacity (resistive load)		20 A 12 V DC (1.4 W type) 30 A 12 V DC (1.8 W type)	20 A 12 V DC		10 A 24 V DC (ON: 2s, OFF: 2s)
	Max. switching voltage		16 V		15 V	30 V
	Max. switching current		120 A (1.4 W type) 150 A (1.8 W type)	120 A	100 A	50 A (Inrush current)
	Max. carrying current		20 A continuous (1.4 W type) 30 A for 1 min (1.8 W type)	20 A continuous	20 A continuous	10 A continuous
	Min. switching capacity#1		1 A 12 V DC			1 A 24 V DC
Nominal operating power			1.4 W / 1.8 W		1.8 W	
Expected life (min. operations)	Mechanical (at 120 cpm)		10^6		5×10^5	
	Electrical	20 A (1.4 W, 1.8 W type)	10^5 (ON: 2s, OFF: 2s)	10^5 (ON 2s, OFF 2s)		10^5 (ON 2s, OFF 2s)
		30 A (1.8 W type)	2×10^4 (ON: 3s, OFF: 15s)			

#1 This value can change due to the switching frequency, environmental conditions, and desired reliability level, therefore it is recommended to check this with the actual load.

Products with diode inside ⚠ are discontinued in 2014.

Characteristics (at 20°C 68°F)

Type		12 V DC		24 V DC
Max. operating speed		15 cpm (1.4 W type: at nominal load; 1.8 W type: at 20 A)	15 cpm (at nominal load)	
Initial insulation resistance		Min. 10 MΩ at 500 V DC		
Initial breakdown voltage*1	Between open contacts	500 V rms for 1 min.		
	Between contacts and coil	500 V rms for 1 min.		
Operate time*2 (at nominal voltage)		Max. 10 ms at 20°C (initial)		Max. 10 ms (initial)
Release time (without diode)*2 (at nominal voltage)		Max. 10 ms at 20°C (initial)		Max. 10 ms (initial)
Shock resistance	Functional*3	Min. 200 m/s² {20 G}	Min. 100 m/s² {10 G}	Min. 100 m/s² {10 G}
	Destructive*4	Min. 1,000 m/s² {100 G}		
Vibration resistance	Functional*5	Rubber bracket A type: Min. 100 m/s² {10 G}, 50 Hz to 500 Hz Direct coupling type or Screw-mounting type: Min. 44.1 m/s² {4.5 G}, 33Hz		Min. 44.1 m/s² {4.5 G}, 33 Hz
	Destructive*6	Rubber bracket A type: Min. 100m/s² {10 G}, 50 Hz to 500 Hz Direct coupling type or Screw-mounting type: Min. 44.1 m/s² {4.5 G}, 33Hz		Min. 44.1 m/s² {4.5 G}, 33 Hz
Conditions for operation, transport and storage*7 (Not freezing and condensing low temperature)	Ambient temp.	–30°C to +80°C –22°F to +176°F		
	Humidity	5% R.H. to 85% R.H.		
Water-proof standard		Plastic sealed type: JIS DO203S2, Dust cover type: JIS DO203R2		JIS DO203S2
Mass		Rubber bracket A type: 23 g .81 oz Direct coupling type or Screw-mounting type: 19 g .67 oz	31 g 1.09 oz	

Electrical life (min. operation)

	Nominal coil voltage, V DC	Motor load (operating frequency ON: 2 s, OFF: 2 s)	Halogen lamp load (operating frequency ON: 1 s, OFF: 14 s)
1 Form A, 1 Form B	12	10^5, 20 A 12 V DC	10^5, 20 A 12 V DC
1 Form C	12	10^5, 20 A 12 V DC	10^5, 20 A 12 V DC
	24	10^5, 10 A 24 V DC	10^5, 6 A 24 V DC

Remarks

*1 Detection current: 10 mA
*2 Excluding contact bounce time
*3 Half-wave pulse of sine wave: 11ms; detection time: 10µs
*4 Half-wave pulse of sine wave: 6ms
*5 Detection time: 10µs
*6 Time of vibration for each direction; X, Y, direction: 2 hours, Z direction: 4 hours
*7 Refer to "6. Usage, Storage and Transport Conditions" in AMBIENT ENVIRONMENT section in Relay Technical Information.

ORDERING INFORMATION

CA [1a] [F] [S] — [12 V] — [A] — [5]

Contact arrangement	Protective construction	Nominal operating power	Coil voltage (DC)	Mounting method	Classification by type
1a: 1 Form A 1b: 1 Form B 1 : 1 Form C	Nil: Plastic sealed type F: Dust cover type	Nil: Standard type (1.8 W) S: Low operating power type (1.4 W) (1 Form A, 1 Form B)	12 V 24 V (1 Form C only)	A: Rubber bracket A type (1 Form A, 1 Form B) N: Screw mounting type C: Direct coupling type	Nil: 1 Form C 5: 1 Form A or 1 Form B

Notes: 1. Type with resistor/diode inside are available as options. Please consult our sales office.
2. Standard packing: Carton: 20 pcs. Case: 200 pcs.
⚠ Types with diode inside are only available until 2014.

COIL DATA

1) Standard type

Contact arrangement	Mounting type	Plastic sealed type	Dust cover type	Nominal voltage, V DC	Pick-up voltage, V DC (at 20°C 68°F)	Drop-out voltage, V DC (at 20°C 68°F)	Nominal operating current, mA (at 20°C 68°F)	Coil resistance, Ω (at 20°C 68°F)	Nominal operating power, W (at 20°C 68°F)	Usable voltage range, V DC
1 Form A	Rubber bracket A	CA1a-12V-A-5	CA1aF-12V-A-5	12	Max. 8	Min. 0.6 to 6	150±10%	80±10%	1.8	10 to 16
	Screw-mounting	CA1a-12V-N-5	CA1aF-12V-N-5	12	Max. 8	Min. 0.6 to 6	150±10%	80±10%	1.8	10 to 16
	Direct coupling	CA1a-12V-C-5	CA1aF-12V-C-5	12	Max. 8	Min. 0.6 to 6	150±10%	80±10%	1.8	10 to 16
1 Form B	Rubber bracket A	CA1b-12V-A-5	CA1bF-12V-A-5	12	Max. 8	Min. 0.6 to 6	150±10%	80±10%	1.8	10 to 16
	Screw-mounting	CA1b-12V-N-5	CA1bF-12V-N-5	12	Max. 8	Min. 0.6 to 6	150±10%	80±10%	1.8	10 to 16
	Direct coupling	CA1b-12V-C-5	CA1bF-12V-C-5	12	Max. 8	Min. 0.6 to 6	150±10%	80±10%	1.8	10 to 16
1 Form C	Screw-mounting	CA1-DC12V-N	–	12	Max. 8	Min. 0.6	150±10%	80±10%	1.8	10 to 15
	Direct coupling	CA1-DC12V-C	–	12	Max. 8	Min. 0.6	150±10%	80±10%	1.8	10 to 15
	Screw-mounting	CA1-DC24V-N	–	24	Max. 16	Min. 1.2	75±10%	320±10%	1.8	20 to 30
	Direct coupling	CA1-DC24V-C	–	24	Max. 16	Min. 1.2	75±10%	320±10%	1.8	20 to 30

2) Low operating power type

Contact arrangement	Mounting type	Plastic sealed type	Dust cover type	Nominal voltage, V DC	Pick-up voltage, V DC (at 20°C 68°F)	Drop-out voltage, V DC (at 20°C 68°F)	Nominal operating current, mA (at 20°C 68°F)	Coil resistance, Ω (at 20°C 68°F)	Nominal operating power, W (at 20°C 68°F)	Usable voltage range, V DC
1 Form A	Rubber bracket A	CA1aS-12V-A-5	CA1aFS-12V-A-5	12	Max. 8	Min. 0.6 to 6	120±10%	100±10%	1.4	10 to 16
	Screw-mounting	CA1aS-12V-N-5	CA1aFS-12V-N-5	12	Max. 8	Min. 0.6 to 6	120±10%	100±10%	1.4	10 to 16
	Direct coupling	CA1aS-12V-C-5	CA1aFS-12V-C-5	12	Max. 8	Min. 0.6 to 6	120±10%	100±10%	1.4	10 to 16
1 Form B	Rubber bracket A	CA1bS-12V-A-5	CA1bFS-12V-A-5	12	Max. 8	Min. 0.6 to 6	120±10%	100±10%	1.4	10 to 16
	Screw-mounting	CA1bS-12V-N-5	CA1bFS-12V-N-5	12	Max. 8	Min. 0.6 to 6	120±10%	100±10%	1.4	10 to 16
	Direct coupling	CA1bS-12V-C-5	CA1bFS-12V-C-5	12	Max. 8	Min. 0.6 to 6	120±10%	100±10%	1.4	10 to 16

DIMENSIONS(mm inch)

Download CAD Data from our Web site.

1. 1 Form A/1 Form B
Rubber bracket A type

CAD Data

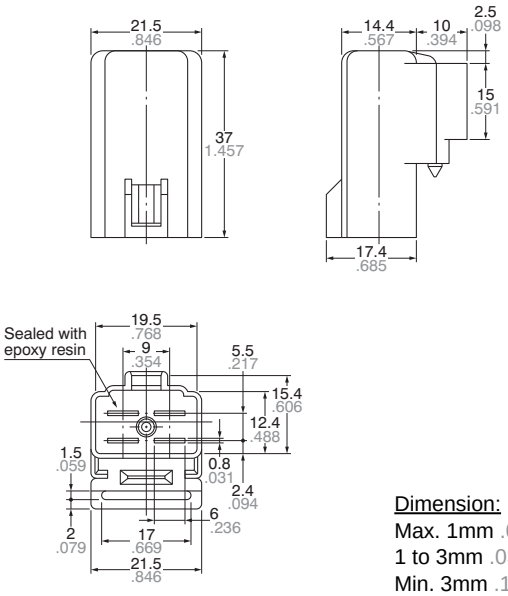

SCHEMATIC (Bottom View)

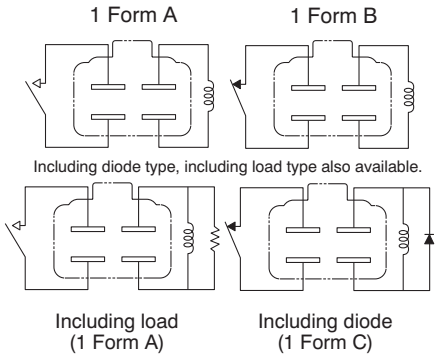

⚠ diode type

Dimension:	General tolerance
Max. 1mm .039 inch:	±0.1 ±.004
1 to 3mm .039 to .118 inch:	±0.2 ±.008
Min. 3mm .118 inch:	±0.3 ±.012

Products with diode inside ⚠ are discontinued in 2014.

2. 1 Form A/1 Form B
Screw-mounting type

CAD Data

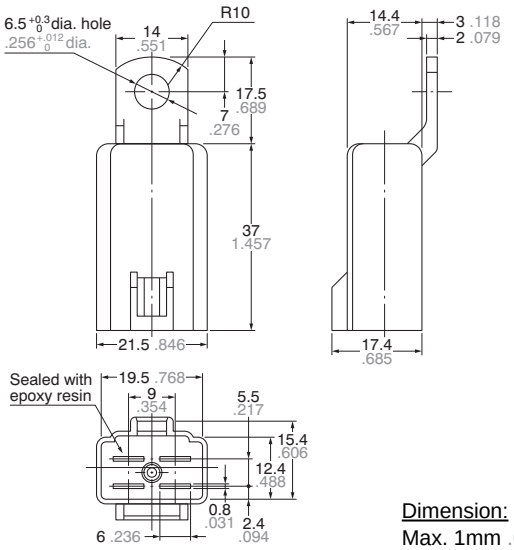

SCHEMATIC (Bottom View)

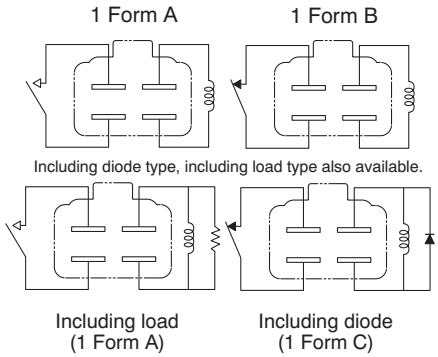

⚠ diode type

Dimension:	General tolerance
Max. 1mm .039 inch:	±0.1 ±.004
1 to 3mm .039 to .118 inch:	±0.2 ±.008
Min. 3mm .118 inch:	±0.3 ±.012

3. 1 Form A/1 Form B
Direct coupling type

mm inch

CAD Data

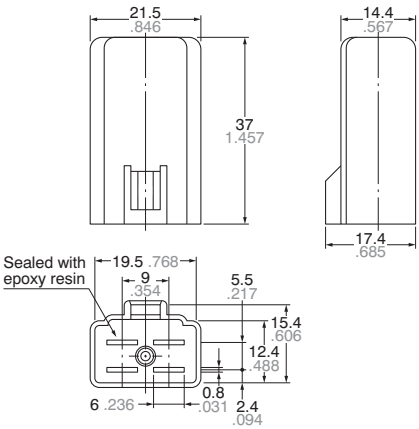

SCHEMATIC (Bottom View)

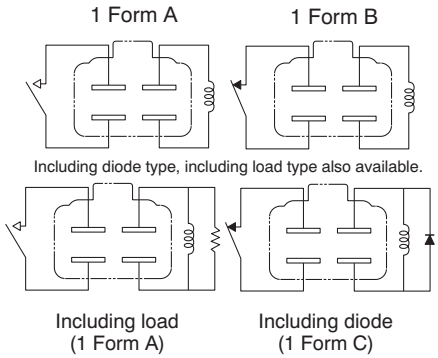

⚠ diode type

Dimension:	General tolerance
Max. 1mm .039 inch:	±0.1 ±.004
1 to 3mm .039 to .118 inch:	±0.2 ±.008
Min. 3mm .118 inch:	±0.3 ±.012

4. 1 Form C
Screw-mounting type

CAD Data

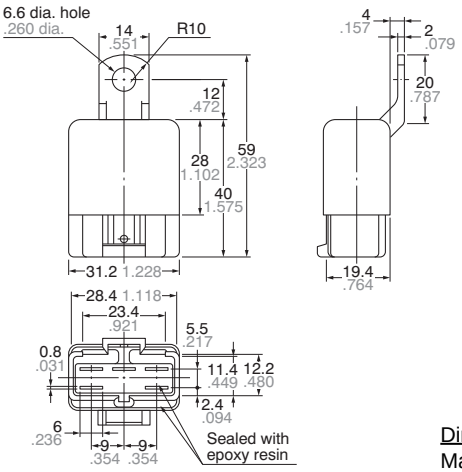

SCHEMATIC (Bottom View)

1 Form C

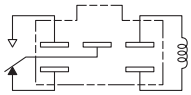

Including diode type, including load type also available.

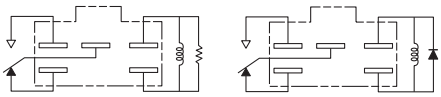

Including load
(1 Form C)

Including diode
(1 Form A)

⚠ diode type

Dimension:	General tolerance
Max. 1mm .039 inch:	±0.1 ±.004
1 to 3mm .039 to .118 inch:	±0.2 ±.008
Min. 3mm .118 inch:	±0.3 ±.012

5. 1 Form C
Direct coupling type

CAD Data

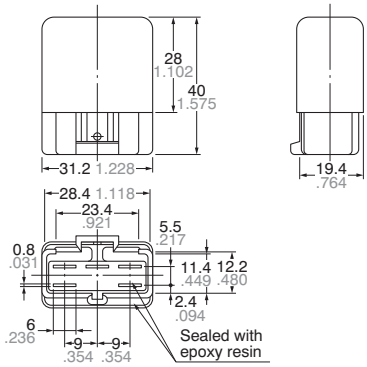

SCHEMATIC (Bottom View)

1 Form C

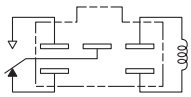

Including diode type, including load type also available.

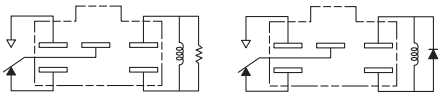

Including load
(1 Form C)

Including diode
(1 Form A)

⚠ diode type

Dimension:	General tolerance
Max. 1mm .039 inch:	±0.1 ±.004
1 to 3mm .039 to .118 inch:	±0.2 ±.008
Min. 3mm .118 inch:	±0.3 ±.012

REFERENCE DATA

1. Coil temperature rise

Samples: CA1aS-12V-N-5, 5pcs.
Measured portion: Inside the coil
Contact carrying current: 20A
Ambient temperature: Room temperature, 85°C
185°F

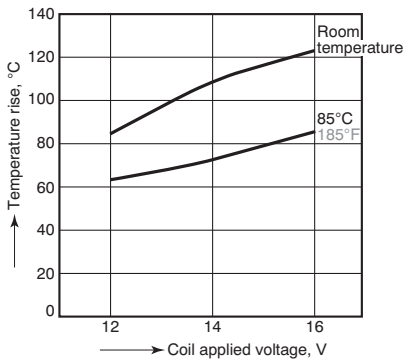

2. Max. switching capability (Resistive load)

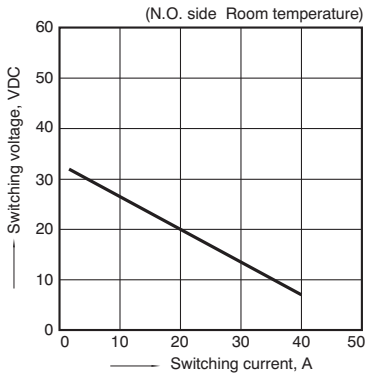

3. Ambient temperature and operating temperature range

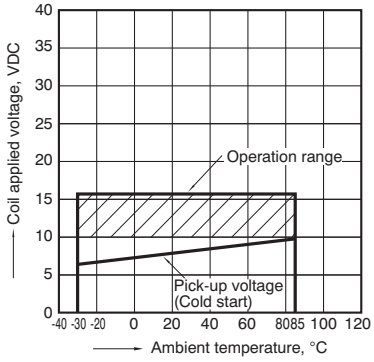

4. Ambient temperature characteristics (Cold start)
Samples: CA1bS-12V-N-5

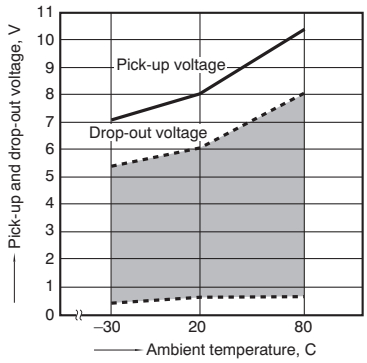

5. Distribution of pick-up and drop-out voltage
Quantity: 50pcs.

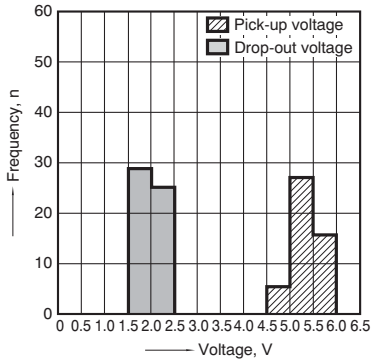

6. Distribution of operate and release time
Sample: CA1a-12V-N-5, 10pcs.

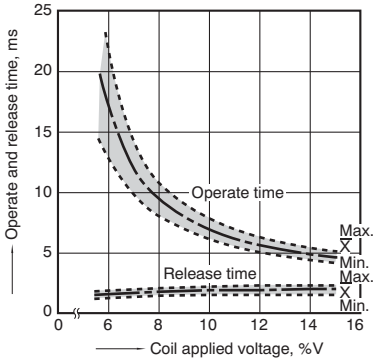

7-(1). Electrical life test (Motor load)
Sample: CA1a-12V-C, 3pcs.
Load: Inrush current: 63A, steady current: 23A
Blower fan motor actual load (motor free)
Switching frequency: (ON:OFF = 2s:2s)
Ambient temperature: Room temperature

Load current waveform
Load: Inrush current: 63A, steady current: 23A,

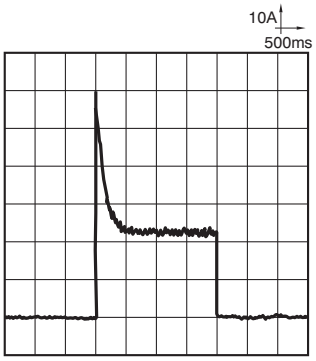

Change of pick-up and drop-out voltage

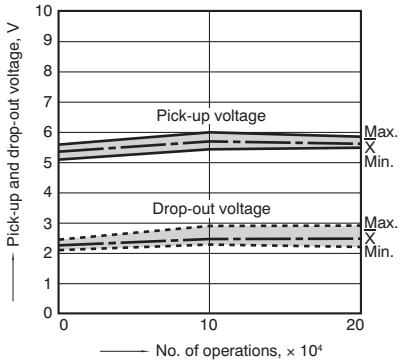

Change of contact resistance

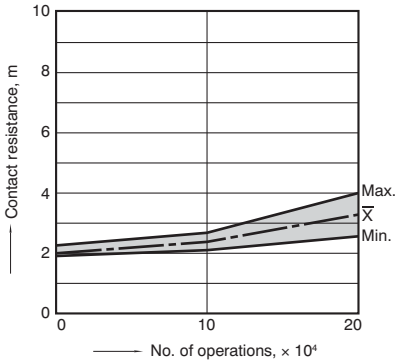

7-(2). Electrical life test (Lamp load)
Sample: CA1a-12V-C, 3pcs.
Load: 60Wx4, Inrush current: 110A, steady current: 20A
Halogen lamp actual load
Switching frequency: (ON:OFF = 1s:14s)
Ambient temperature: Room temperature

Load current waveform
Load: Inrush current: 110A, steady current: 20A,

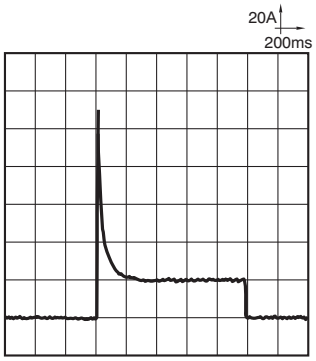

Change of pick-up and drop-out voltage

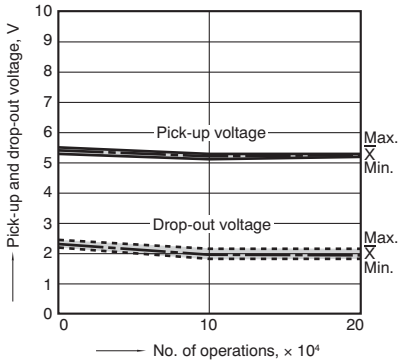

Change of contact resistance

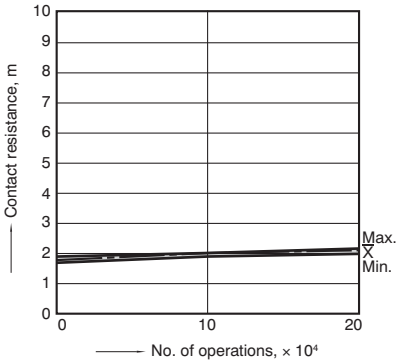

Cautions regarding the protection element

1. Part numbers without protection elements

1) 12 V models

When connecting a coil surge protection circuit to these relays, we recommend a Zener diode with a Zener voltage of 24 V or higher, or a resistor (680Ω to 1,000Ω). When a diode is connected to the coil in parallel, the release time will slow down and working life may shorten. Before use, please check the circuit and verify that the diode is not connected in parallel to the coil drive circuit.

2) 24 V models

When connecting a coil surge protection circuit to these relays, we recommend a Zener diode with a Zener voltage of 48 V or higher, or a resistor (2,800Ω to 4,700Ω).

When a diode is connected to the coil in parallel, the release time will slow down and working life may shorten. Before use, please check the circuit and verify that the diode is not connected in parallel to the coil drive circuit.

⚠ 2. Part numbers with diodes

These relays use a diode in the coil surge protection element. Therefore, the release time is slower and the working life might be shorter compared to part numbers without protection elements and part numbers with resistors.

Be sure to use only after evaluating under actual load conditions.

3. Part numbers with resistors

This part number employs a resistor in the coil surge protection circuit; therefore, an external surge protection element is not required. In particular, when a diode is connected in parallel with a coil, the revert time becomes slower which could adversely affect working life. Please check the circuit and make sure that a diode is not connected in parallel with the coil drive circuit.

For Cautions for Use, see Relay Technical Information.